C4E160NL-200NL

The new C4E160NL-200NL range combines the manoeuvrability typical of a truck with battery above the rear axle (shorter total lenght) with the advantages of AC technology. Two independent high power front wheel traction AC motors form an electronic differential which allows it to work in the tightest spaces.

Technical Details		C4E160NL	C4E200NL
Power unit		electric	electric
Operating type		driver seated	driver seated
Rated capacity	kg	1600	2000
Load centre	mm	500	500
Load per axle without load, front/rear	kg	1470/1945	1405/2215
Load per axle with load, front/rear	kg	4365/650	4920/700
Number of wheels, front/rear		2/2	2/2
Wheel type, front/rear [1]		C/SE/PN	C/SE
dimension, front		432x152/18x7-8/18x7-8	457x178/200/50-10
dimension, rear		381x127/16x6-8/16x6-8	381x127/16x6-8
Centre of wheels, front	mm	823/835/835	812/845
Centre of wheels, rear	mm	863/843/843	863/843
Fork arm carriage acc. to ISO-FEM		II A	II A
Travel speed, without/with rated load	km/h	15,0/14,0	15,0/14,0
Service brake		hydraulic	hydraulic
Parking brake		hand brake	hand brake
Lift speed, without/with rated load	m/s	0,54/0,34	0,54/0,32
Lowering speed, without/with rated load	m/s	0,45/0,51	0,45/0,51
Nom. drawbar pull, without/with load	N	3140/2820	3140/2740
Max. drawbar pull, without/with load (S2 5')	N	9000/8680	9000/8620
Gradient, without/with rated load (S2 30')	%	10,7/6,4	9,4/5,2
Max. gradient, without/with rated load (S2 5')	%	28,0/17,5	25,0/15,0
Drive motor	kW	4,5 x 2	4,5 x 2
Lift motor	kW	10	10
Battery capacity	V/Ah	48/640-840	48/640-840
Battery weight	kg	1120-1275	1120-1275
Weight with battery	kg	3415	3620
Steering system		hydraulic	hydraulic
Speed control		AC Mosfet	AC Mosfet
Working pressure for attachments	bar	140	140

Dimensions, mm		C4E160NL	C4E200NL
x	Front axle to fork face	370 [2]	370 [2]
y	Wheel base	1220	1220
α/β	Mast tilt forward/backward	2°30'/6°	2°30'/6°
h_6	Height overhead guard	2191	2191
h_7	Height of driver's seat	1167	1167
l_2	Truck length incl. back of fork	1910 [2]	1960 [2]
b_1	Chassis, width	1020/1020/1020	1020/1050
s	Fork thickness	35	35
e	Fork width	100	120
l	Fork length	1000	1000
m_1	Floor clearance under mast	100	100
m_2	Floor clearance mid wheelbase	83	83
A_{st}	Aisle width, mm Pallet size 800x1200/1000x1200 [3]	3408/3259 [2]	3437/3288 [2]
W_a	Turning radius	1619	1648

1) C = Cushion, SE = Superelastic, PN = Pneumatic
2) With side shift = +34mm
3) Shortside handling / longside handling

Mast, mm	Duplex			Duplex FFL			Triplex				Triplex FFL			
h_3 Lift height	3170	3670	4170	3170	3670	4170	4320	4965	5565	6075	4320	4970	5570	6070
C4E160NL, C4E200NL														
h_1 Height of mast, min.	2160	2410	2660	2160	2410	2660	2010	2260	2460	2660	2010	2260	2460	2660
h_2 Free lift	80	80	80	1580	1830	2080	0	0	0	0	1340	1680	1880	2080
h_4 Height of mast, max.	3720	4220	4720	3750	4250	4750	4900	5570	6170	6710	4900	5550	6150	6650

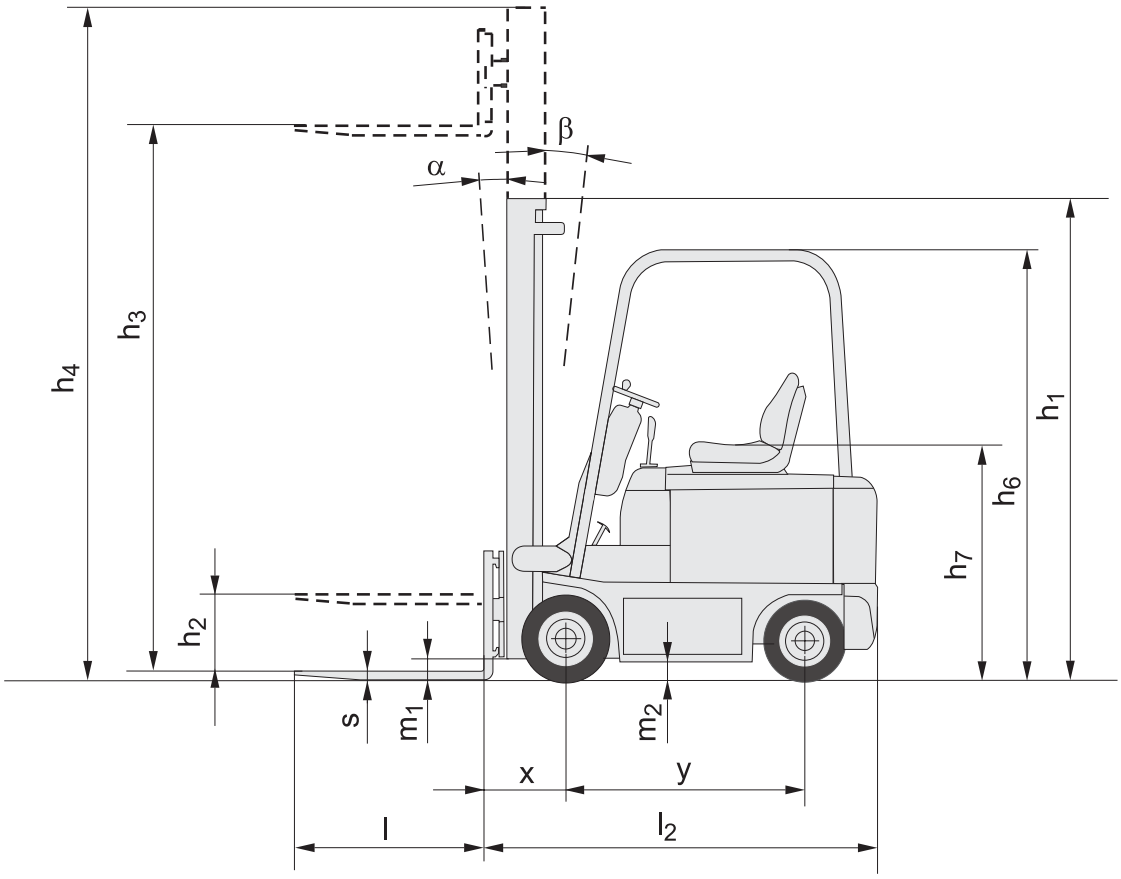

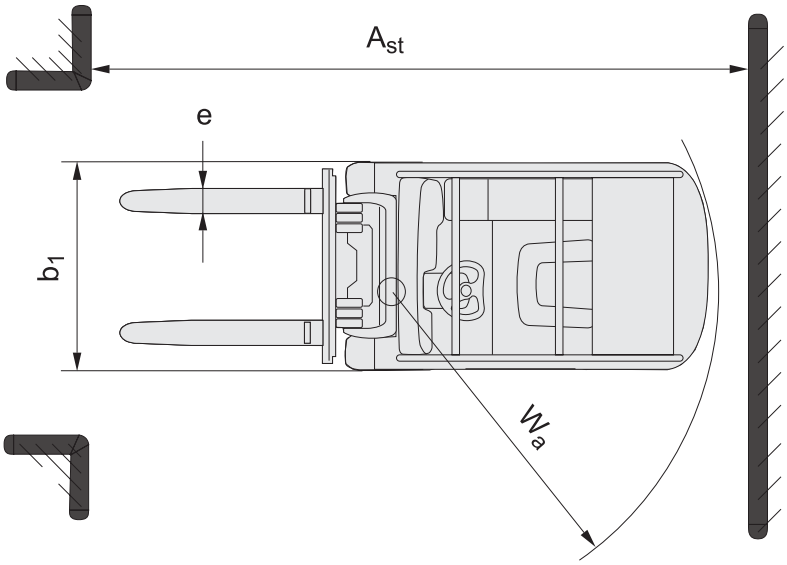

Truck performance and dimensions are nominal and subject to tolerances.
BT Products AB products and specifications are subject to change without notice.
All data is based on VDI 2198.

- Asynchronous drive ensures quick direction changes, smooth acceleration and outstanding efficiency. The low power consumption and the capability for using high-capacity batteries give the machine exceptional autonomy of operation. It also allows the truck to be held on ramps without engaging the brakes
- The operator has a choice of different driving modes, selected by just pressing the buttons on the steering column.
- The raised driving position assures an excellent view of the load. The levers are conveniently to hand for the operator.
- Steering-wheel height and angle are easily adjustable. The parking-brake lever is beside the steering column, high up, to give the operator more room and increase his comfort.
- The comfortable adjustable spring-cushioned seat is equipped with inertia safety belt as standard.
- As well as guaranteeing constantly effective braking action, the use of oil bath brakes allows savings on routine servicing costs.

Truck features	C4E160NL	C4E200NL
Adjustable fork width	S	S
Tilting mast	S	S
Counter-rotating front wheels	S	S
Controls and instruments		
Hydraulic steering	S	S
Information display	S	S
Sideshift	S	S
Electronic fingertip controls	O	O
Mini-joystick electronic controls	O	O
Driving features		
Electronic regenerative brakes	S	S
Three driving programs	S	S
Curve cut-back speed	S	S
Safety features		
Clear-view mast	S	S
Driver detection system	S	S
Emergency cut-off	S	S
Programmable performance	S	S
Drivers compartment features		
Adjustable seat with safety belt	S	S
Adjustable steering wheel	S	S
Enclosed cab with or without heating	O	O
Maintenance features		
Easy access for maintenance	S	S
Fault diagnosis facility	S	S
Oil bath brakes	S	S
Battery management features		
Battery status indicator	S	S
Battery discharge prevention system	S	S
Lateral battery extraction	O	O

S = Standard feature O = Optional feature — = Not available

ITS, Sweden — 749010b-040, 0411

BT
SE-595 81 Mjölby Sweden
Tel: +46 (0)142 860 00
Fax: +46 (0) 142 866 00
Email: info@bt-forklifts.com
www.bt-forklifts.com